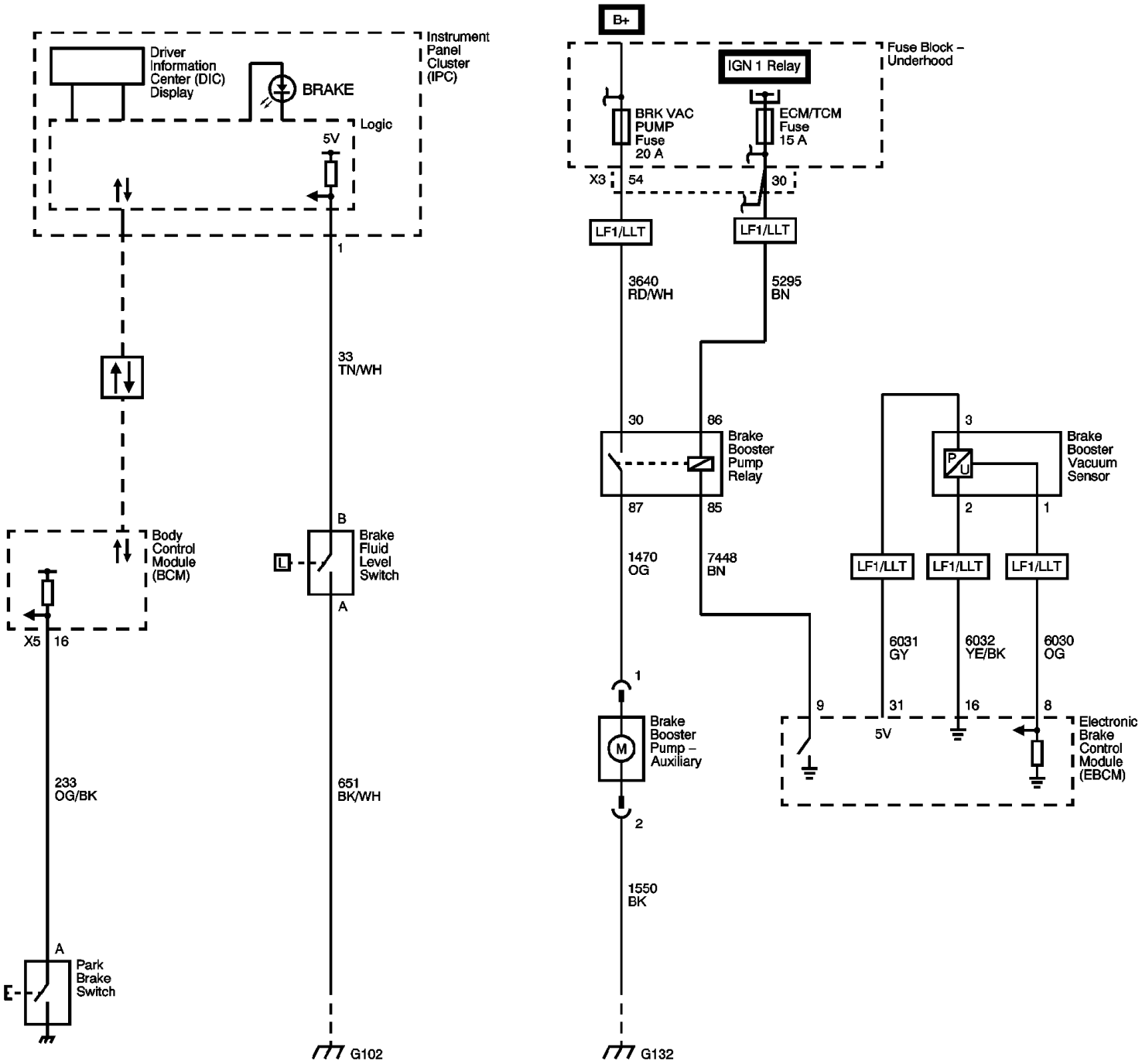
Instrument Panel Cluster (IPC)
Driver Information Center (DIC) Display
BRAKE
Logic
5V
1
33 TN/WH
Body Control Module (BCM)
X5
16
B
Brake Fluid Level Switch
L
A
233 OG/BK
651 BK/WH
A
Park Brake Switch
E
G102
B+
IGN 1 Relay
Fuse Block – Underhood
BRK VAC PUMP Fuse 20 A
ECM/TCM Fuse 15 A
X3
54
30
LF1/LLT
LF1/LLT
3640 RD/WH
5295 BN
30
86
Brake Booster Pump Relay
87
85
1470 OG
7448 BN
3
Brake Booster Vacuum Sensor
P
U
2
1
LF1/LLT
LF1/LLT
LF1/LLT
6031 GY
6032 YE/BK
6030 OG
1
Brake Booster Pump – Auxiliary
M
2
9
31
16
8
5V
Electronic Brake Control Module (EBCM)
1550 BK
G132